IP-DR14-18W-5CCT

14" Double Ring Flush Mount Fixture with 5CCT Selector

MWLIGHTING

Project Name:	Order Number:	Prepare by:	Note:	Date:	Type:

DOUBLE RING FLUSH MOUNT

The **(IP-DR) Double Ring** Flush Mount Fixture brings you a modern ceiling lighting solution. Fits all your need for the environment light. With the 5 selectable color temperature technology you can choose your most favorite environment color temperature without changing the lamp. CCT switch on the back of the fixture easily. You also get all other benefits of LED technology, including longer life to lower maintenance cost, less heat for better energy saving in summer.

Perfect use for residential housings, condominiums, business building, hotel and hospitality industry.

Intertek · ENERGY STAR · CALIFORNIA T24 COMPLIANT · RoHS COMPLIANT · DAMP LOCATIONS · DIMMABLE · 5 YEARS LTD WARRANTY

EASY-SWITCH 5CCT SELECTABLE

Select color temperature from
- 2700K WARM WHITE
- 3000K SOFT WHITE
- 3500K NATURAL WHITE
- 4000K COOL WHITE
- 5000K DAYLIGHT

DIMENSION

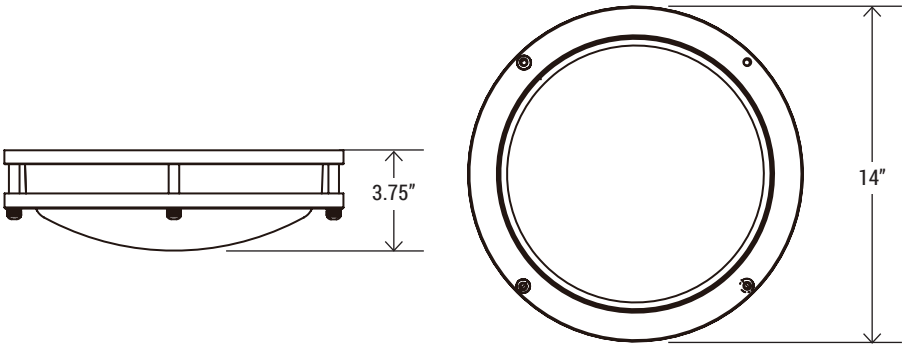

Energy Star® and ETL cerfitted. It can be used to comply with Title-24 and JA8 high efficacy light source requirements.

TECHNICAL SUMMARY

LUMENS	WATTS	EFFICACY	CRI	VOLTAGE	DIMMING	CCT	PF	LIFE	OPERATING TEMP.
1440	**18W**	80 lm/W	80	120V, 60 Hz	Smooth dim to 10%	2700K/3000K/ 3500K/ 4000K/5000K	>0.9	50,000 hrs	-40ºF ~ 104ºF

PART NUMBER ORDERING SUMMARY

IP - DR 14 - 18W - 5CCT

- **IP** — IP Seeies
- **DR** — Double Ring
- **14"** — Aperture
- **18W** — Wattage
- **5CCT** — 27K/30K/35K/40K/50K

IP-DR14-18W-5CCT

14" Double Ring Flush Mount Fixture with 5CCT Selector

Project Name:	Order Number:	Prepare by:	Note:	Date:	Type:

CONSTRUCTION
- Select color temperature from 2700K warm white, 3000K soft white, 3500K natural white, 4000K cool white, or 5000K daylight for your environment

OPTICS
- High quality PC lens
- Efficiency LED array
- Diffuse for uniform illumination

DRIVER
- High efficiency integral 120V 60Hz constant current dimmable driver.
- Smooth flicker free deep dimming to 10%

MOUNTING
- Surface mount on junction box

LISTING
ETL Listed, Energy Star Listed, Suitable for Wet Locations, Title 24 JA8-2022, RoHS

WARRANTY
5 years manufacturer warranty, consult factory for more details. Terms and conditions may apply.

PHOTOMETRY

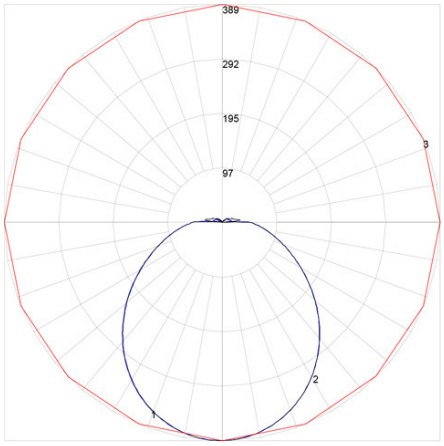

Maximum Candela = 389.08 Located At Horizontal Angle = 225, Vertical Angle = 1
1 - Vertical Plane Through Horizontal Angles (225 - 45) (Through Max. Cd.)
2 - Vertical Plane Through Horizontal Angles (0 - 180)
3 - Horizontal Cone Through Vertical Angle (1) (Through Max. Cd.)

RECOMMENDED DIMMERS

LUTRON
- TGCL-153PH-WH
- DVCL-153PR
- P-PKG1W-WH-R
- CTCL-153PDH-WH

LEVITON
- R00-RNL06-TW
- R50-IPL06-10M